52 12TH STREET SE
MENAHGA, MN 56464
PHONE: 218-564-7256
www.salomfg.com

HANDICAP ACCESSIBLE BARRIER-FREE

MODEL 162H BF-MN

1-piece

Width:	62"
Depth:	39"
Height:	78 7/8"

*MODEL 162H BF DOES NOT INCLUDE 24" VERTICAL GRAB BAR SHOWN BELOW.

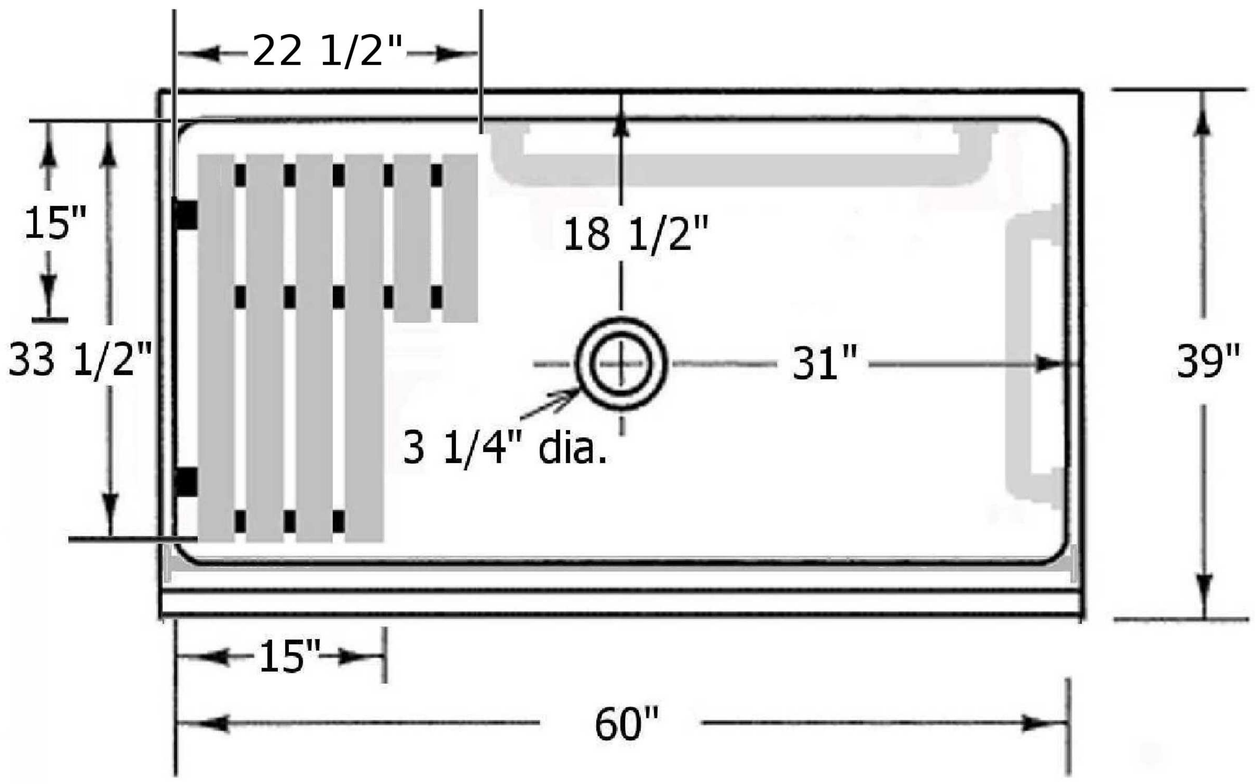

ADA and Minnesota compliant when fully equipped with folding seat, grab bars, pressure balancing mixing valve, vacuum breaker and hose, and hand-held shower with slide bar. Accessories shall be installed per drawing to comply with ADA and Minnesota requirements.

All dimensions may vary.

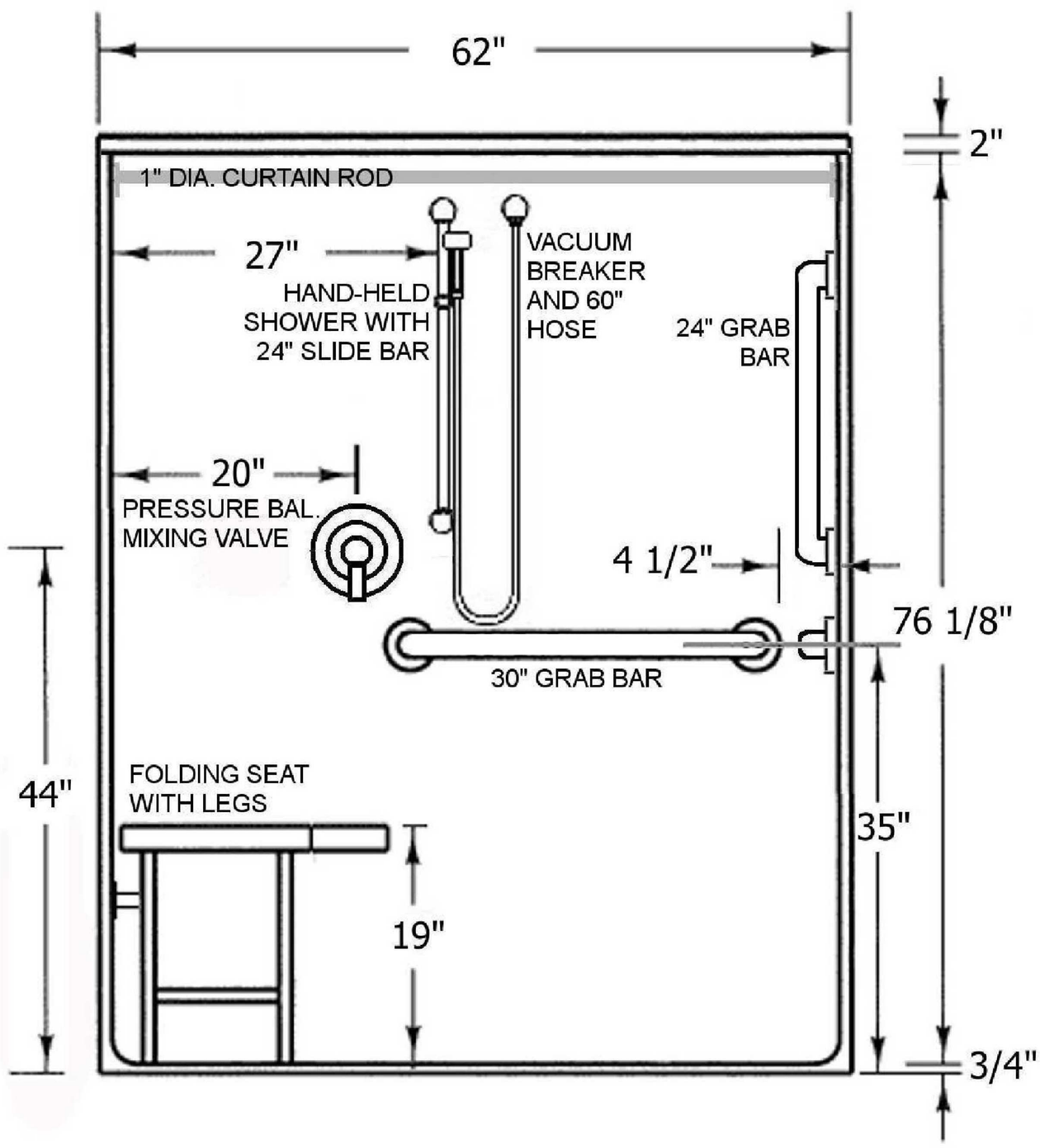

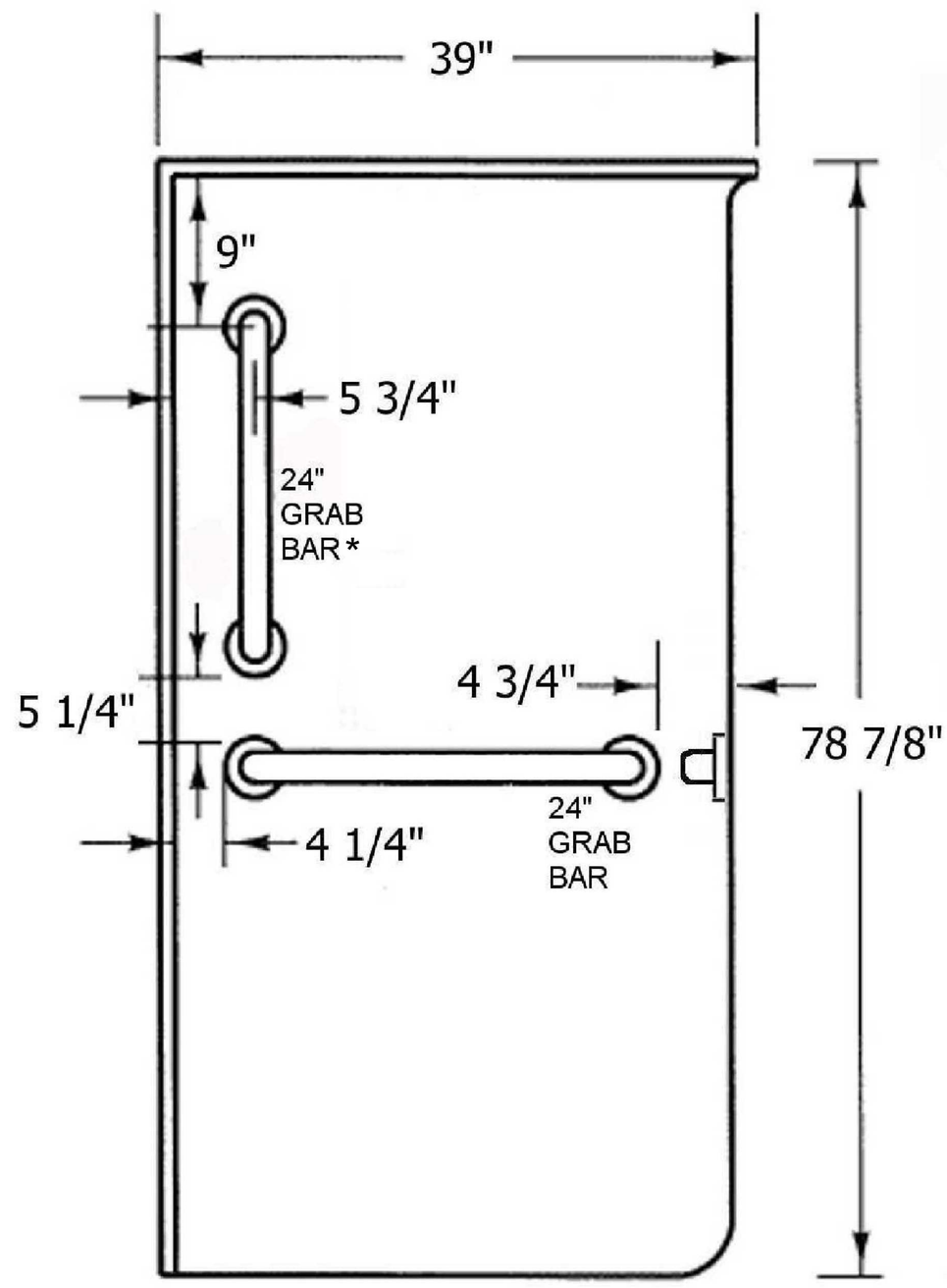

(C) 2011 Salo Manufacturing, Inc.