52 12TH STREET SE
MENAHGA, MN 56464
PHONE: 218-564-7256
www.salomfg.com

HANDICAP ACCESSIBLE BARRIER-FREE

MODEL 148H BF-MN

1-piece

Width: 48"
Depth: 39"
Height: 78 7/8"

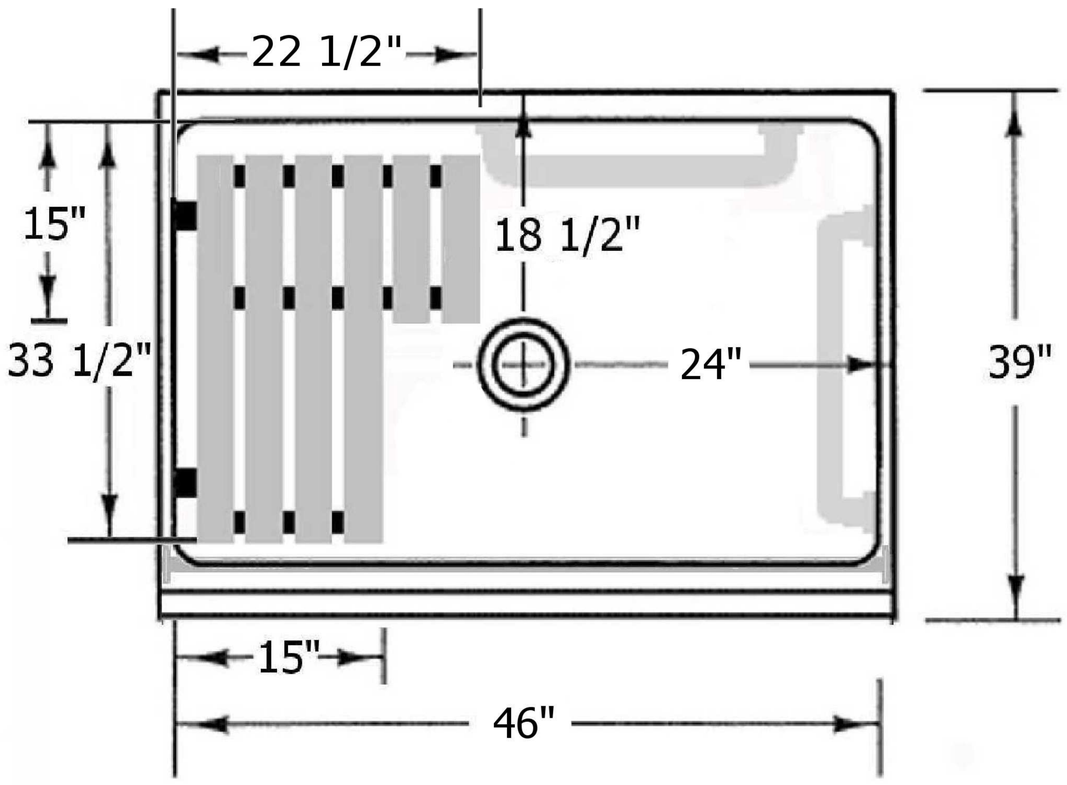

*MODEL 148H BF DOES NOT INCLUDE 24" VERTICAL GRAB BAR SHOWN BELOW.

All dimensions may vary.

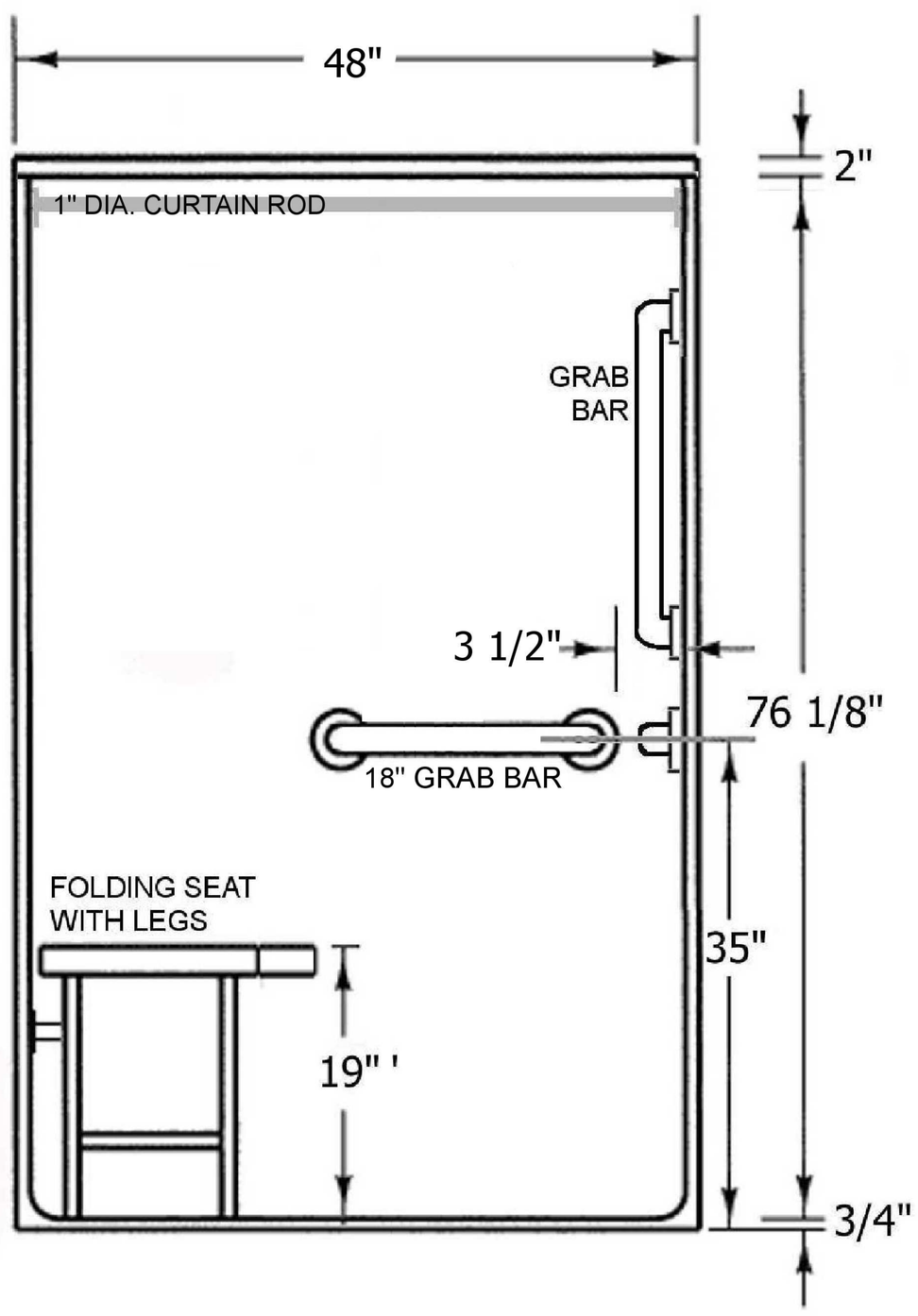

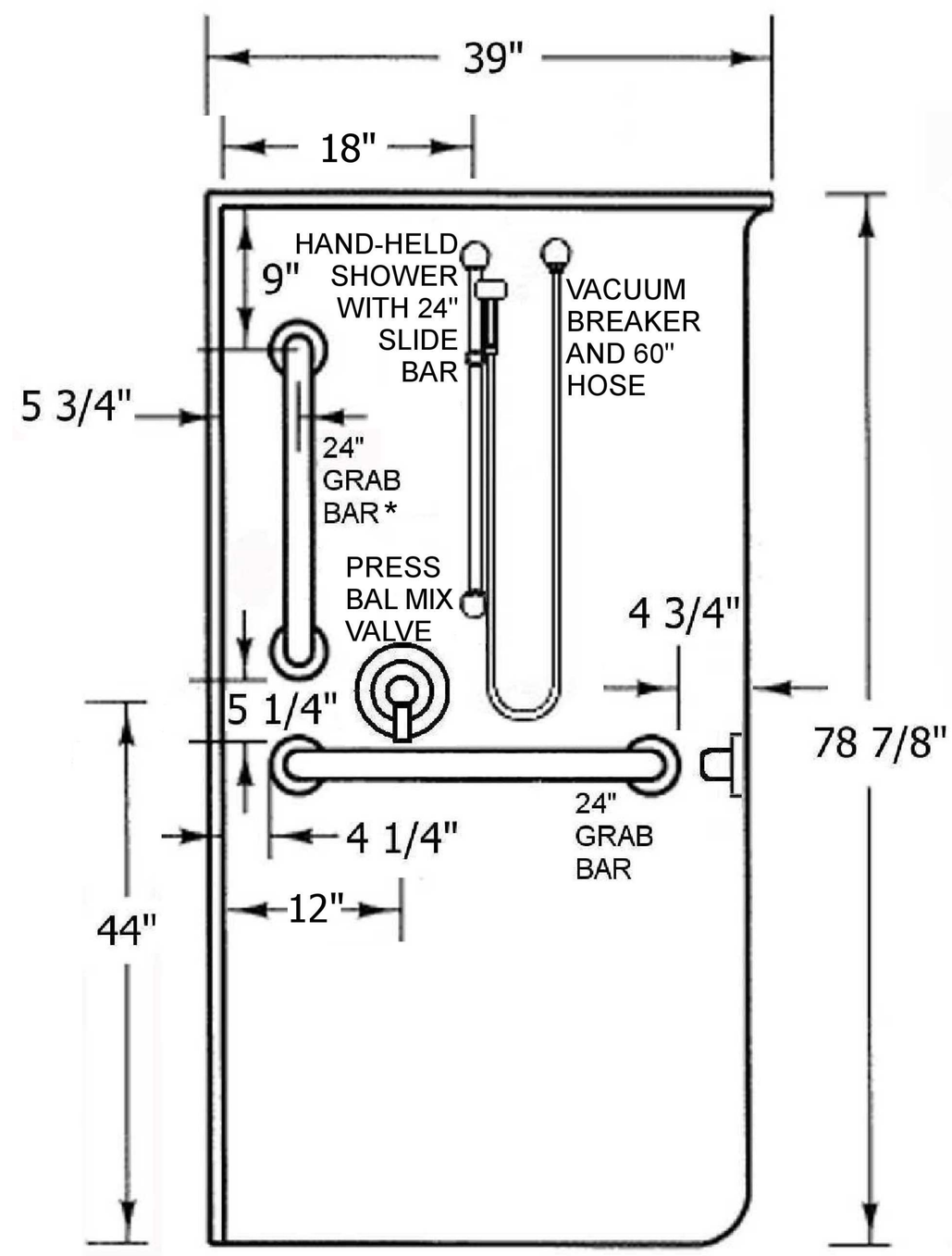

(C) 2011 Salo Manufacturing, Inc.